Part Names and Functions

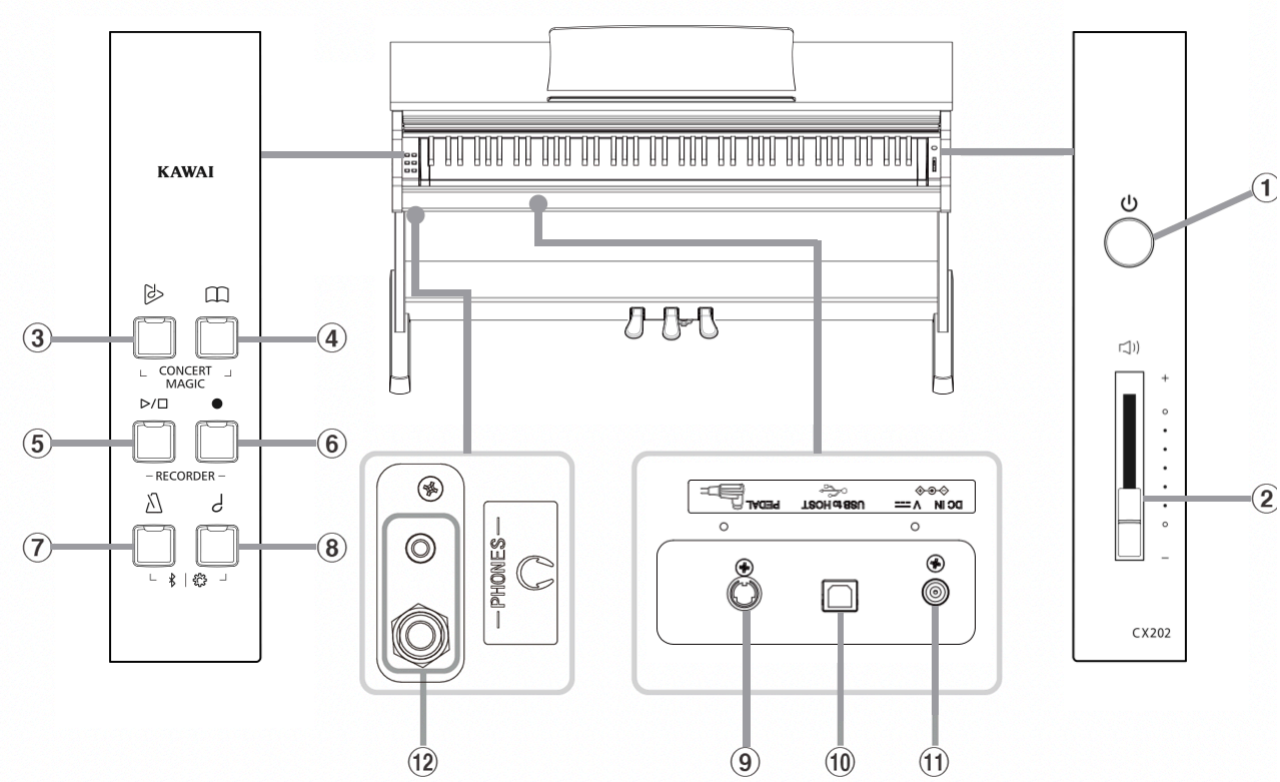

① POWER button

This button is used to turn the digital piano on/off.
Be sure to turn off the instrument after playing.

② MASTER VOLUME slider

This slider controls the master volume level of the digital piano’s built-in speakers or headphones, if connected.

③ DEMO button

This button is used to start/stop playback of the digital piano’s built-in Demo songs.



④ LESSON button

This button is used to select the digital piano’s built-in Lesson songs.



⑤ PLAY / STOP button

This button is used to start/stop the playback of Recorder songs stored in memory and the digital piano’s built-in Lessons songs.



⑥ REC button

This button is used to record the performance.



⑦ METRONOME button

This button is used to turn the metronome function on/off and adjust its tempo, time signature, and volume settings.



⑧ SOUND SELECT button

This button is used to select the sound(s) that will be heard when the keys are pressed.



⑨ PEDAL connector

This connector is used to connect the digital piano’s pedal board to the instrument.

⑩ USB to Host port

This port is use to connect the instrument to a computer using a USB “B to A” type cable in order to send and receive MIDI data.

⑪ DC IN jack

This jack is used to connect the AC adaptor.

⑫ PHONES jacks

These jacks are used to connect stereo headphones to the digital piano.
Two pairs of headphones can be connected and used simultaneously.